M12 Female Panel Mount, PCB Type, Front fastened, X-coding, Shielded

- Connector series: M12
- Gender: Female
- Coding: X
- Locking type: Fix screw
- Mounting type: Front fastened
- Part No.: MB12FBSXFF08ST-2

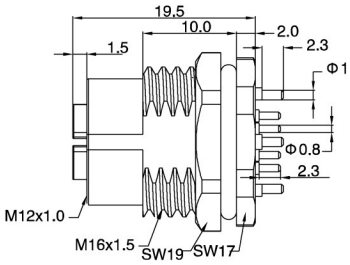

General information

Standard:	IEC 61076-2-109
Ambient temperature:	-25℃~ + 90℃
Connector insert:	PA
Connector contacts:	Brass with gold plated
Connector screw/nut:	Brass/Zinc with nickel plated
Seal / O-ring:	FKM

Insulation resistance:	⩾100MΩ
Contact resistance :	⩽10mΩ
Shielding:	Available
IP rating:	IP68 in locked condition
Mating endurance:	>500 cycles

Electrical data & Mechanical data

Contacts		Contacts termination	Rated current	Voltage		Part No.
				A/C	D/C	
08 pins		PCB version	0.5A	50V	60V	MB12FBSXFF08ST-2

Panel Cut-out Dimensions

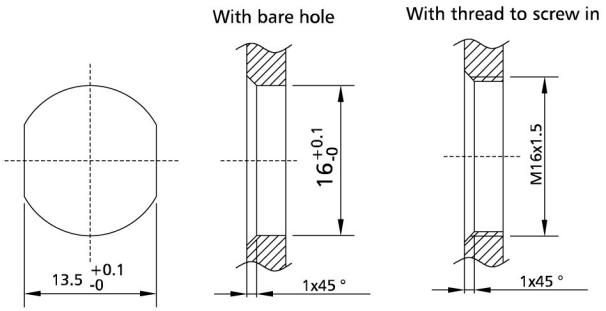

PCB Layout

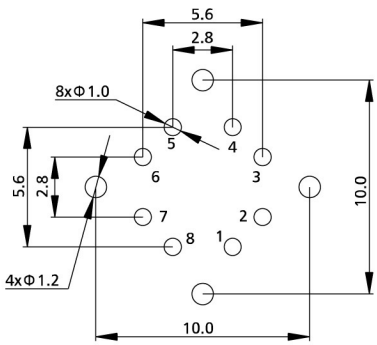

Remarks

- Please refer to Page 96 for products' part number encoding rule.